KCL AND KVL

CIRCUIT ANALYSIS METHOD

prepared by:

Gyro A. Madrona

Electronics Engineer

GRADING SYSTEM

FINAL GRADE

30%	30%	**40%**
PRELIM	MIDTERM	ENDTERM

TERM GRADE

50%

WEEKLY

50%

EXAM

100%

LABORATORY

PENALTY

0

ABSENT

3

45-min LATE

7 max

15-min LATE

TOPIC OUTLINE

Labeling Variables

Current Flow Convention

Voltage Loop Convention

Kirchoff's Current Law (KCL)

Kirchoff's Voltage Law (KVL)

CIRCUIT CONVENTION

LABELING VARIABLES

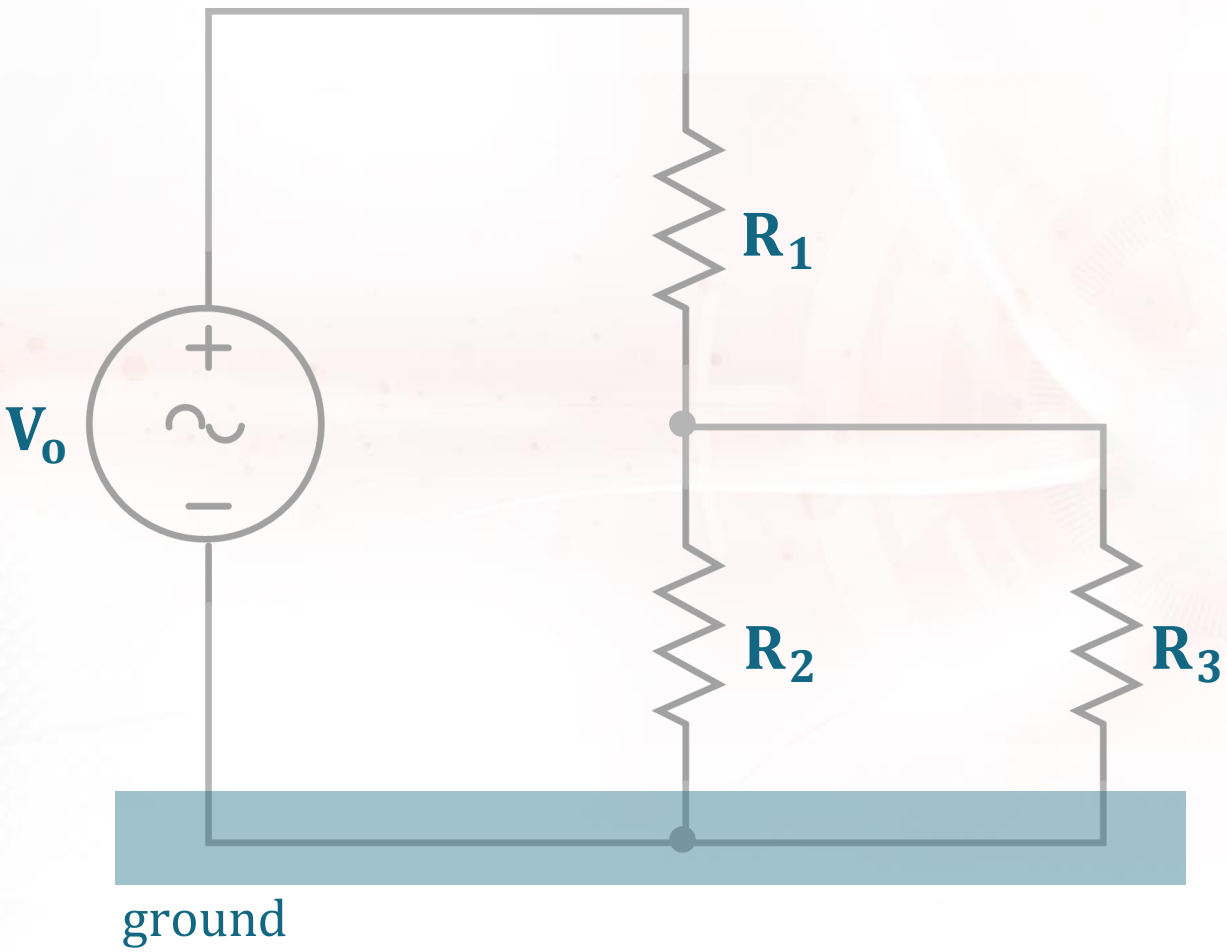

Select **reference node** (⏚) from which voltages are measured

Label **voltages** with respect to reference node

Label **current** flowing into the positive (+) terminal of the element

Create a **voltage loop**

Label the variables of the given circuit.

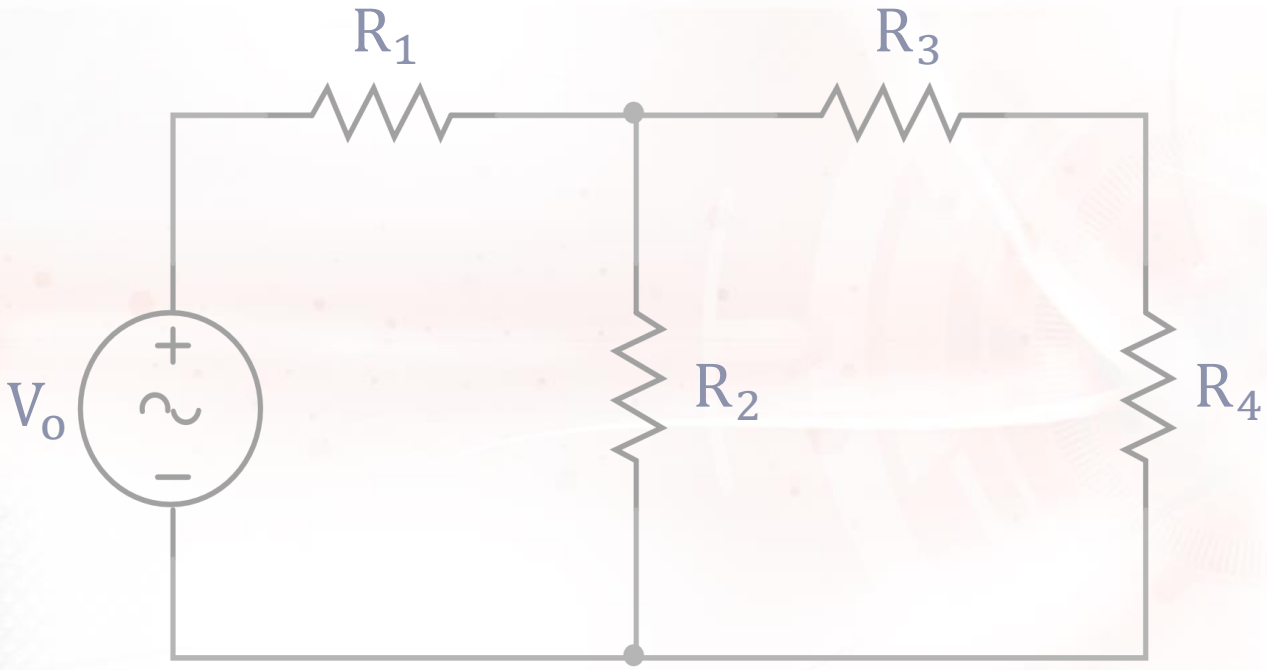

CURRENT FLOW CONVENTION

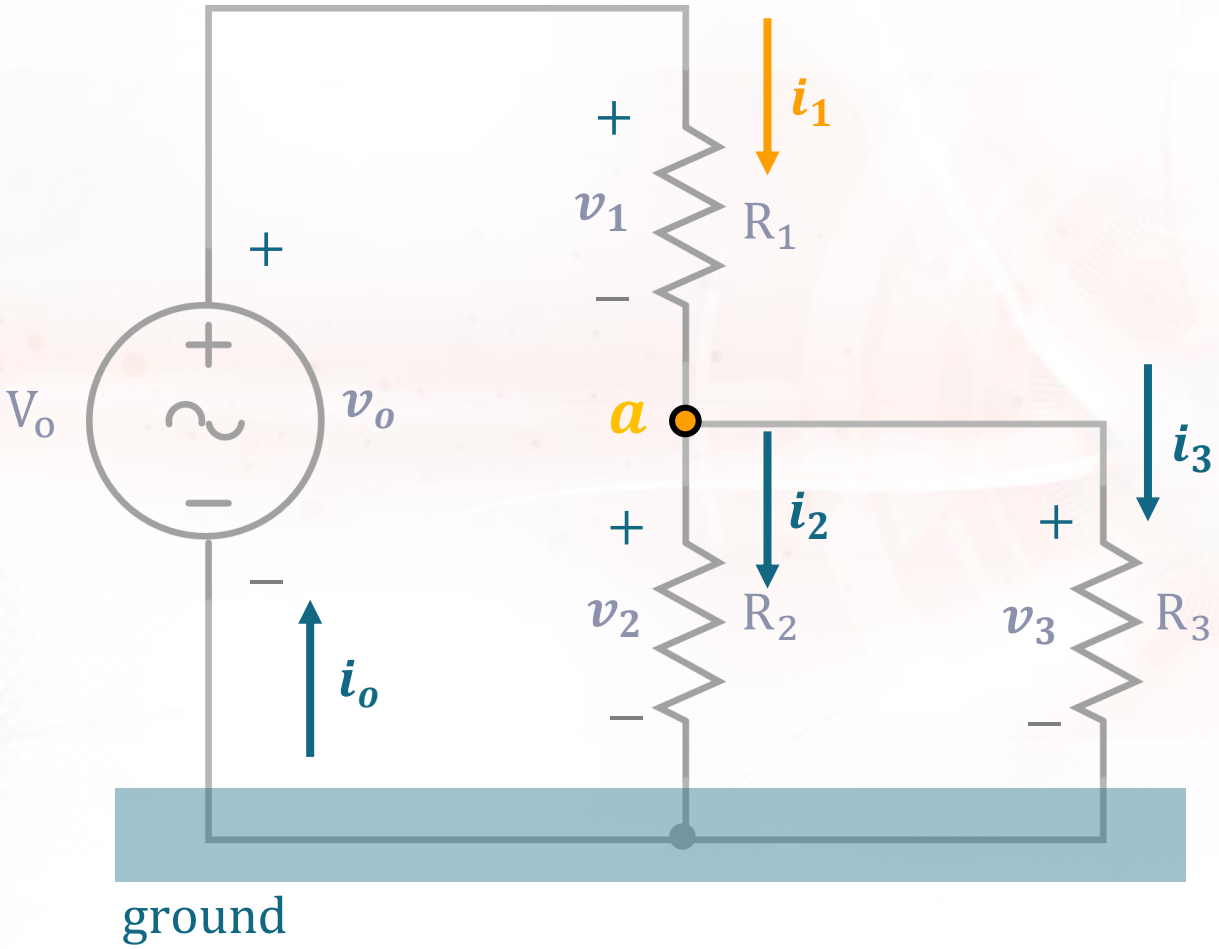

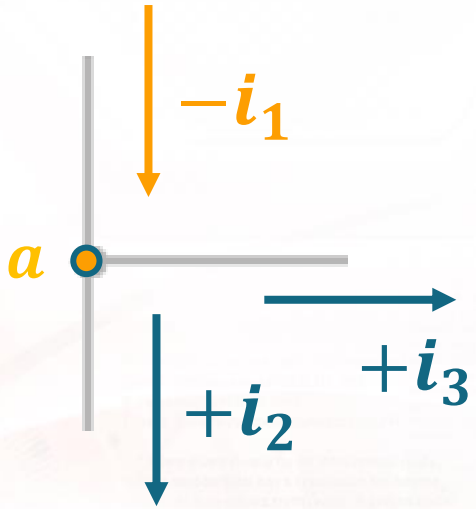

Current is taken to be **negative** going **in**to the node

Current is taken to be **positive** going **out** from the node

VOLTAGE LOOP CONVENTION

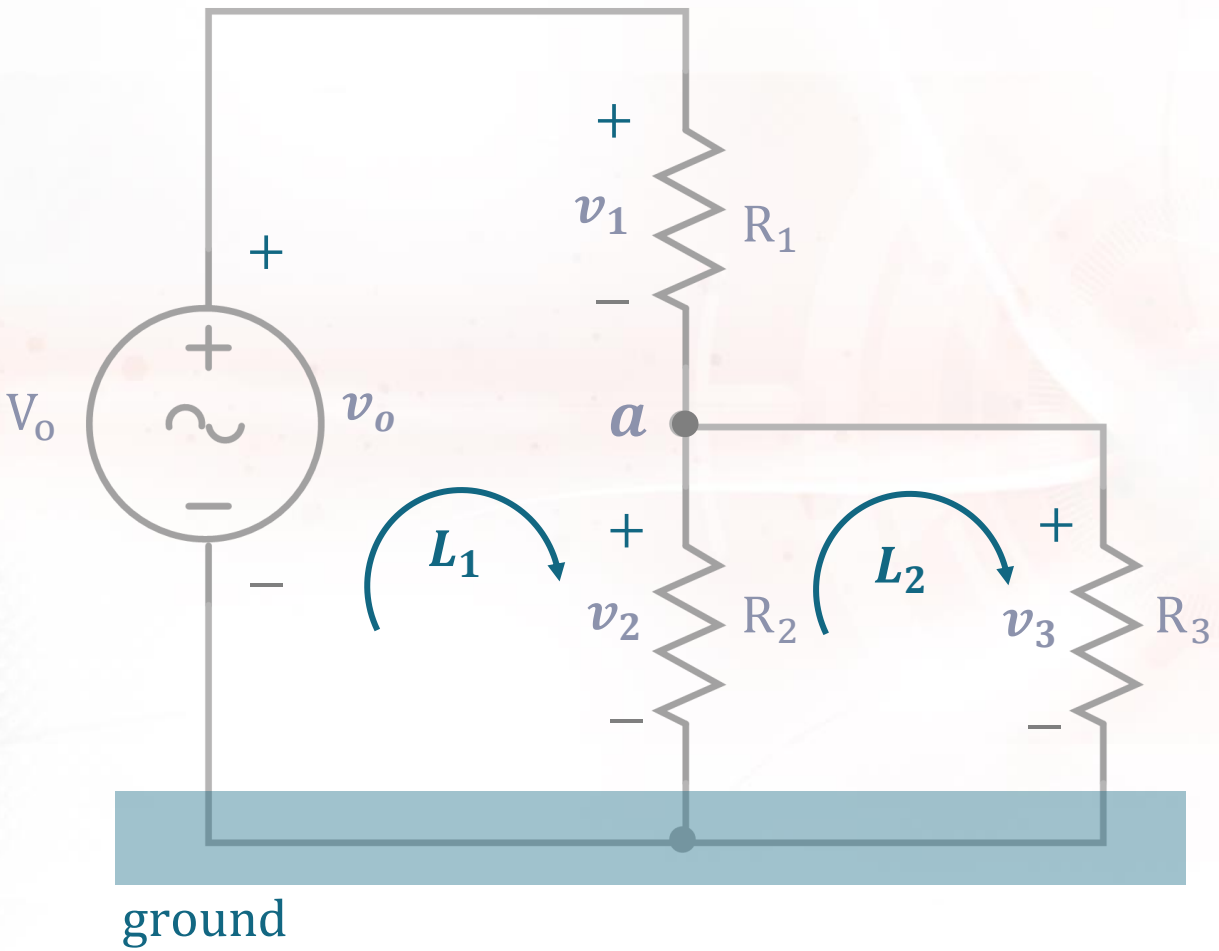

$@L_1$,	$@L_2$,
$-v_0$	$-v_2$
$+v_1$	$+v_3$
$+v_2$	

The "**sign**" of voltage of the element is the **first** sign the loop encounters

KCL AND KVL

KIRCHHOFF'S CURRENT LAW

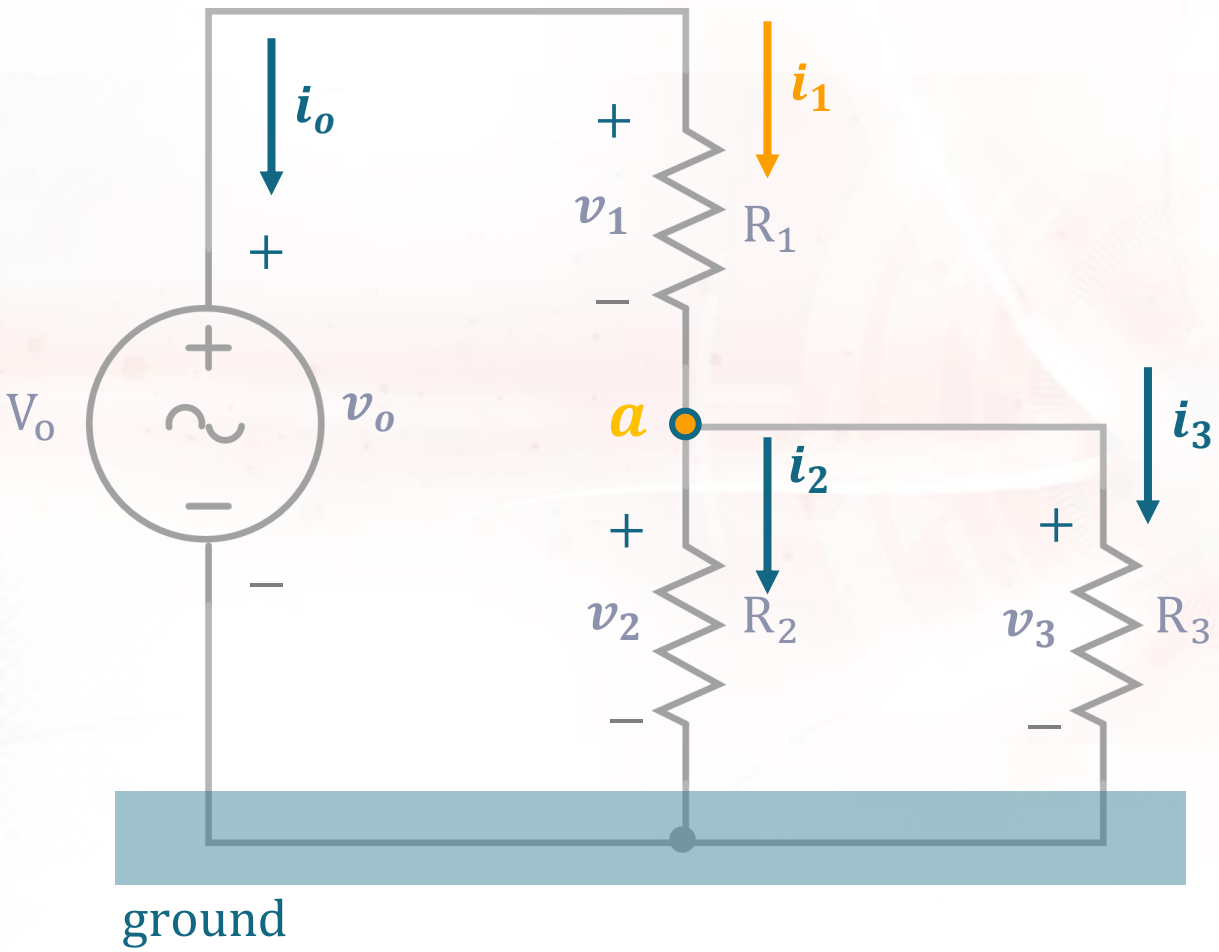

The summation of **currents** going-in and going-out a node is **zero**

$$\sum_{node} i_j = 0$$

*KCL @ **a**,*

$$-i_1 + i_2 + i_3 = 0$$

KIRCHHOFF'S VOLTAGE LAW

The summation of **voltages** in a closed-loop is **zero**

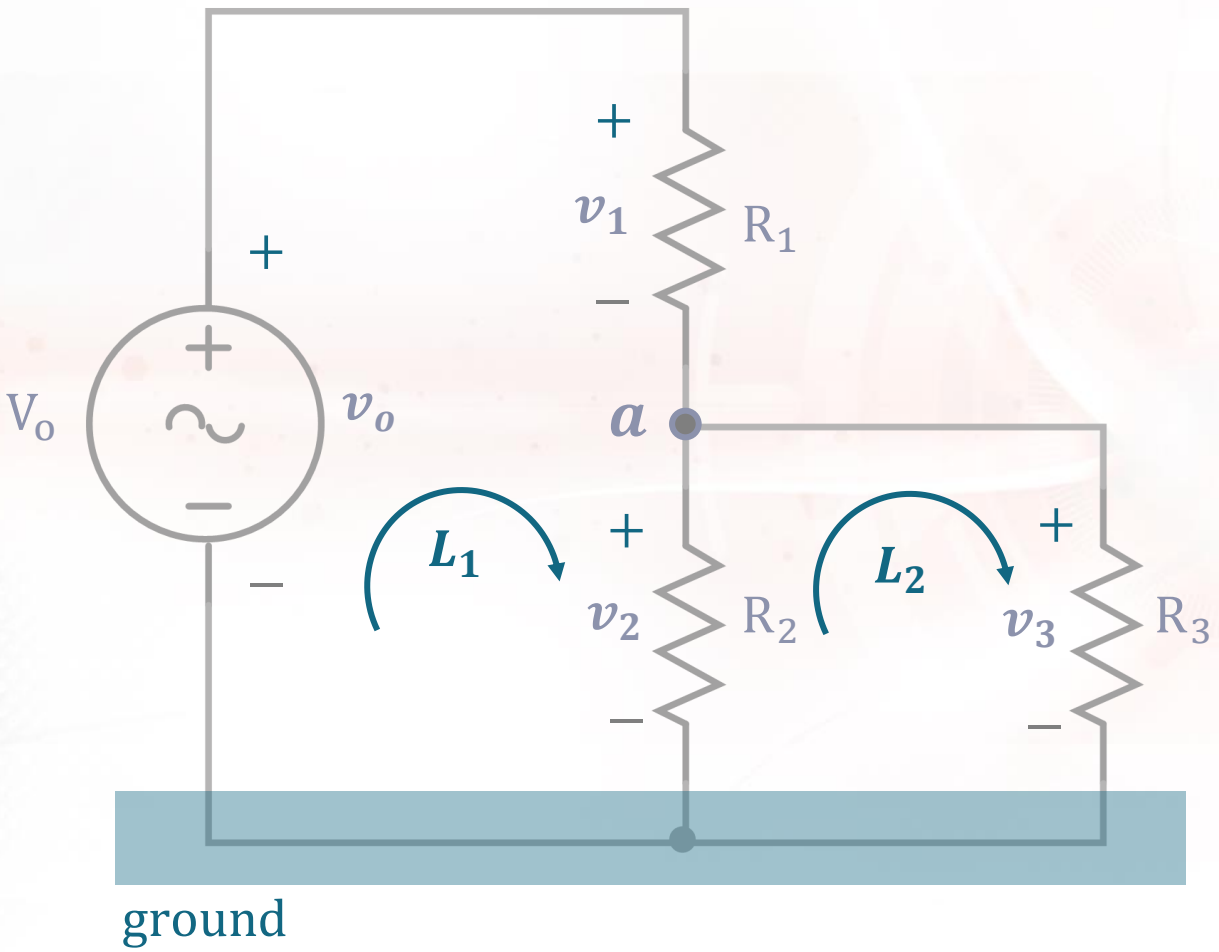

$$\sum_{loop} v_j = 0$$

KVL@$\boldsymbol{L_1}$,

$$-v_o + v_1 + v_2 = 0$$

KIRCHHOFF'S VOLTAGE LAW

The summation of **voltages** in a closed-loop is **zero**

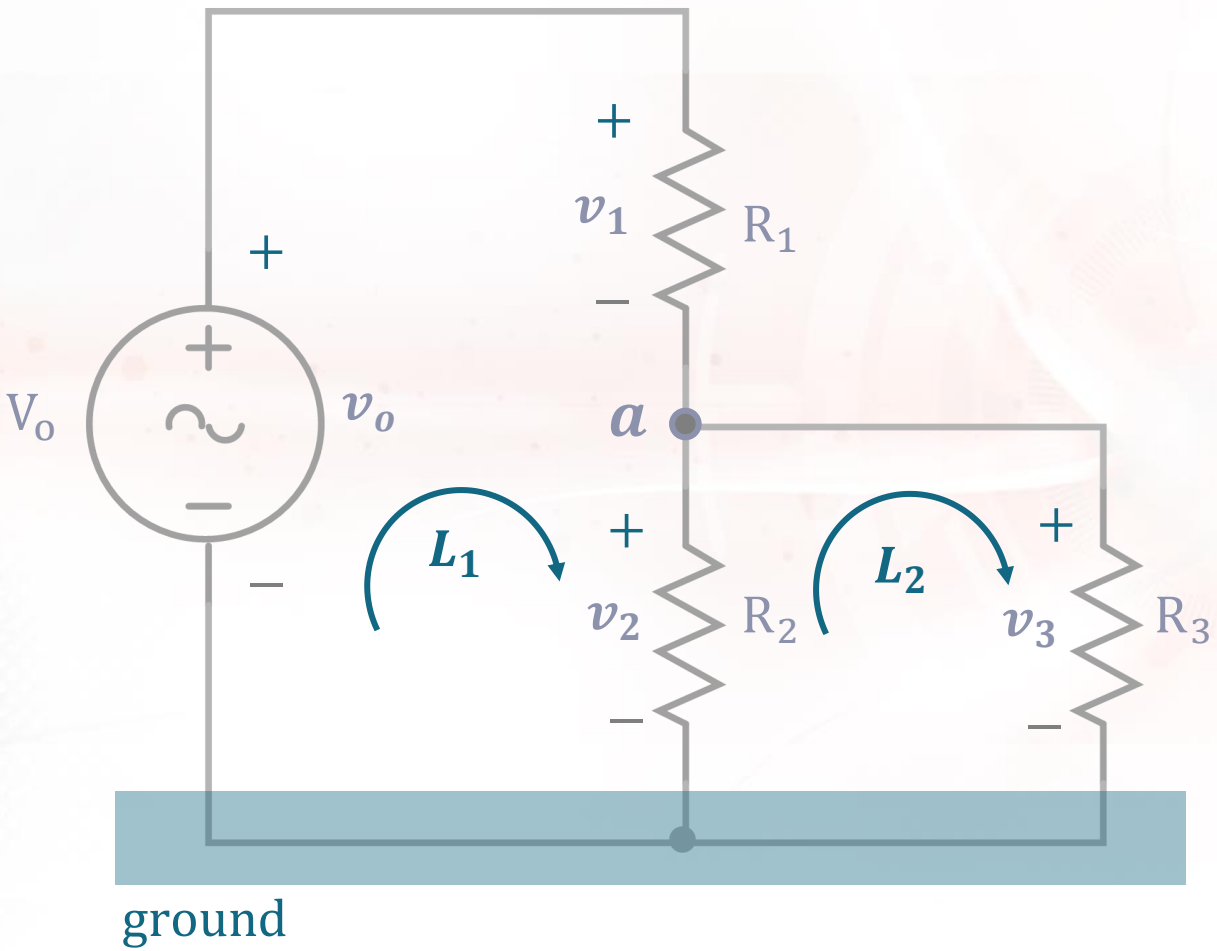

$$\sum_{loop} v_j = 0$$

KVL@$\boldsymbol{L_2}$,

$$-v_2 + v_3 = 0$$

Write the corresponding **KCL/KVL** equation of the given circuit.

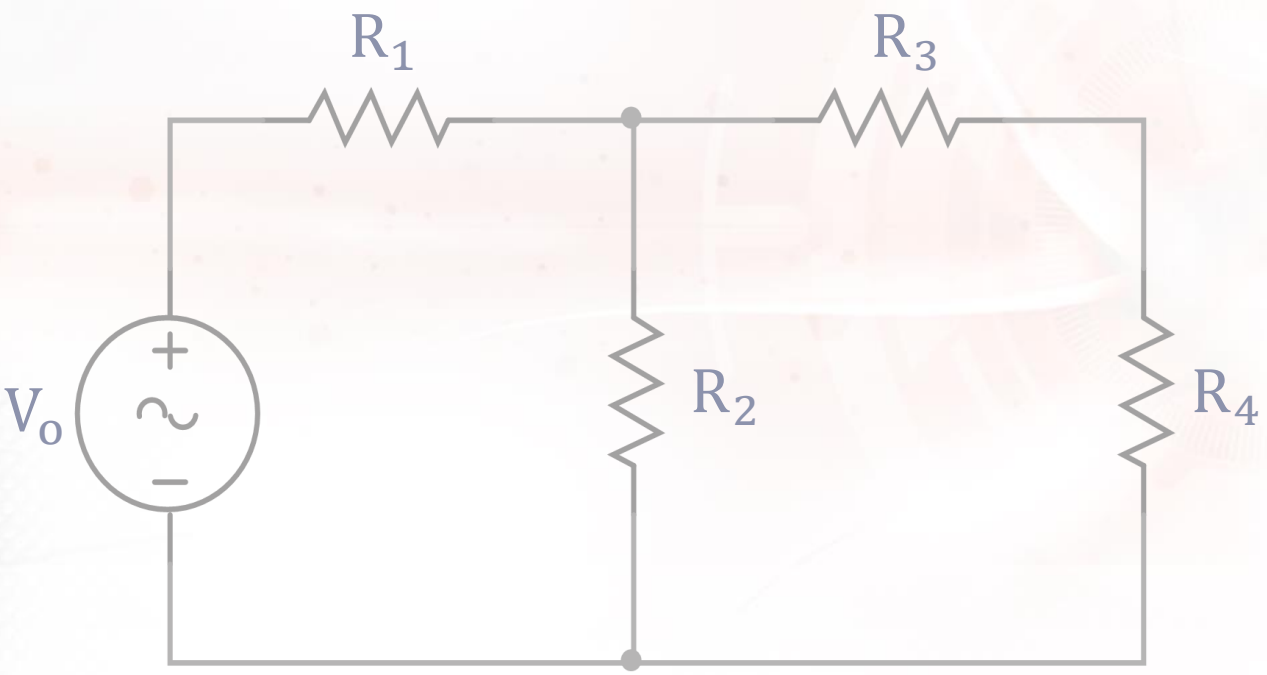

The power consumed by element, e

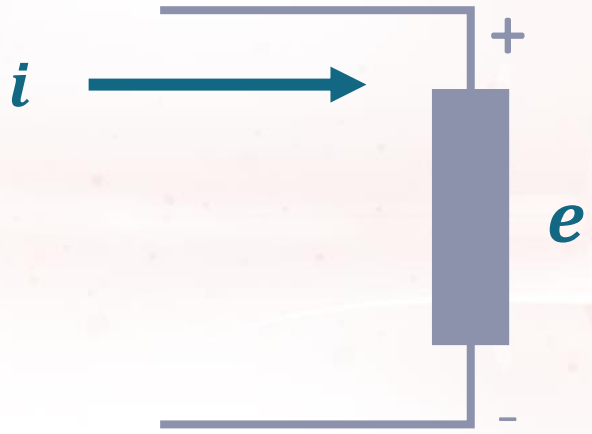

$$P = vi$$

$$P = i^2 R$$

$$P = \frac{v^2}{R}$$

unit: Watt(W)

Determine the value of **current**, **voltage**, and **power** of every element in the given circuit using **KCL/KVL** method.

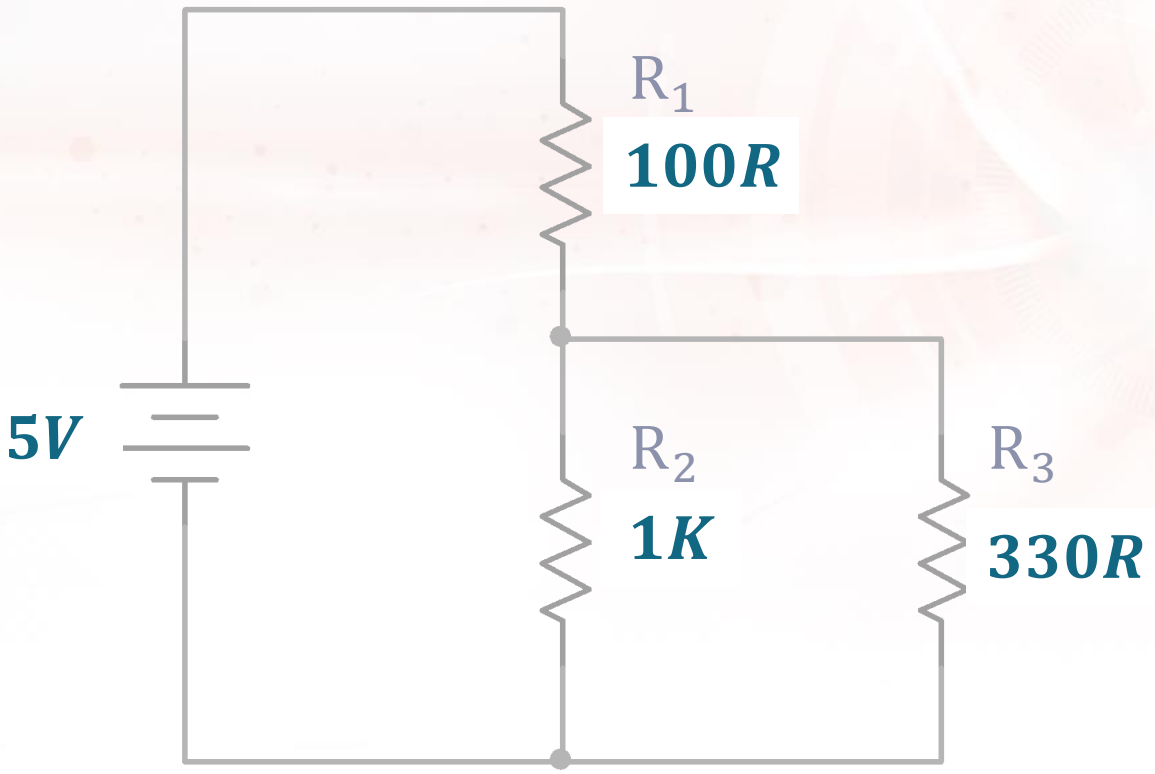

Determine the value of R_1 that satisfies the condition of the given circuit using **KCL/KVL** method.

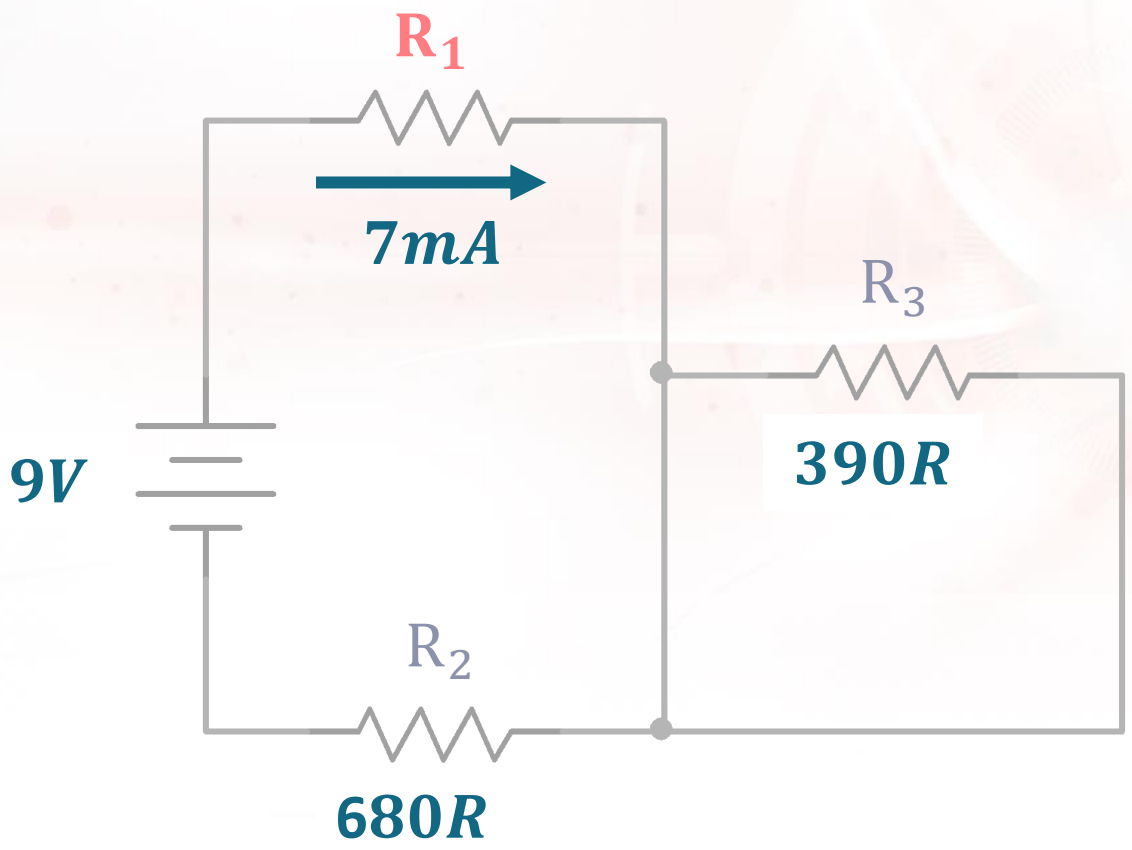

LABORATORY